THE STRUCTURE OF MELITTIN IN THE FORM I CRYSTALS AND ITS IMPLICATION FOR MELITTIN'S LYTIC AND SURFACE ACTIVITIES

THOMAS C. TERWILLIGER, LARRY WEISSMAN, AND DAVID EISENBERG
Molecular Biology Institute and Department of Chemistry, University of California at Los Angeles, Los Angeles, California 90024 U.S.A.

ABSTRACT Melittin from bee venom is water-soluble, yet integrates into membranes and lyses cells. Each melittin chain consists of 26 amino acid residues and in aqueous salt solutions it exists as a tetramer. We have determined the molecular structure of the tetramer in two crystal forms grown from concentrated salt solutions. In both crystal forms the melittin polypeptide is a bent α-helical rod, with the "inner" surface largely consisting of hydrophobic sidechains and the "outer" surface consisting of hydrophilic side chains. Thus, the helix is strongly amphiphilic. In the tetramer, four such helices contribute their hydrophobic side chains to the center of the molecule. The packing of melittin tetramers is also very similar in the two crystal forms: they are packed in planar layers with the outsides forming hydrophilic surfaces and the insides (the centers of melittin tetramers) forming a hydrophobic surface. We suggest that the surface activity of melittin can be rationalized in terms of these surfaces. The lytic activity of melittin can also be interpreted in terms of the molecular structure observed in the crystals: the hydrophobic inner surface of a melittin helix may integrate into the apolar region of a bilayer with the helix axis approximately parallel to the plane of the bilayer, and with the hydrophilic surface exposed to the aqueous phase. This integration would be expected to disrupt the bilayer because the melittin helix would penetrate only a short distance into it. Additionally, the integration of melittin from one side of a bilayer would produce a surface area difference across the bilayer, perhaps leading to lysis. In this view, melittin is distinct from membrane proteins that penetrate evenly into both leaflets of a bilayer or exactly halfway through a bilayer, and hence we refer to melittin as a surface-active protein.

INTRODUCTION

This paper describes the structure of melittin in form I crystals and attempts to rationalize two properties of melittin, its surface and lytic activities, in terms of its molecular structure. The surface properties of melittin include its ability to form surface monolayers at water-air interfaces, dramatically lowering the surface tension of water, and to penetrate lipid surface monolayers (Sessa et al., 1969). The lytic properties of melittin include its integration into, and disruption of, synthetic and natural lipid membranes including those of leukocytes, erythrocytes, lysosomes, and mitochondria (Habermann 1972; Sessa et al., 1969).

Evidence that the surface and lytic activities of melittin might arise from different structural features was presented by Habermann and Kowallek (1970). They found that various chemical modifications of the amino groups and of the tryptophanyl residue of melittin affected its surface action differently than its lytic activity.

The covalent structure of melittin was determined by Habermann and Jentsch (1967) to be as follows: NH_3-Gly-Ile-Gly-Ala-Val-Leu-Lys-Val-Leu-Thr-Thr-Gly-Leu-Pro-Ala-Leu-Ile-Ser-Trp-Ile-Lys-Arg-Lys-Arg-Gln-Gln-$CONH_2$. It has been known for some time that melittin exists as a tetramer in aqueous salt solutions (Habermann, 1972), and recently the monomer-tetramer equilibrium has received careful study with the aid of several physical methods (Talbot et al., 1979; Brown et al., 1980).

We have determined the three-dimensional structure of melittin in two crystal forms grown from aqueous solutions containing high concentrations of ammonium sulfate and sodium formate (Anderson et al., 1980). In other reports, we describe the structure of the form II crystals at 6 Å (Eisenberg et al., 1980) and 2 Å resolution.[1,2] Here we report on the structure of the form I crystals. We find that not only are the structures of the melittin chains similar in the two forms, but the packing of the tetramers in the

Dr. Weissman's present address is Department of Physics, University of Virginia, Charlottesville, Virginia 22901 U.S.A.

[1]Terwilliger, T. C., and D. Eisenberg. The structure of melittin. Determination of the structure. In preparation.

[2]Terwilliger, T. C., and D. Eisenberg. The structure of melittin. Interpretation of the structure. In preparation.

crystals is very similar as well. The common features of the crystal packing for the two forms suggest a basis for the surface properties of melittin. Also the structure of the monomer within both crystals suggests a possible mechanism for integration of melittin into membranes and for cell lysis.

DETERMINATION OF THE STRUCTURE OF THE FORM I CRYSTALS

The determination of the structure of the form II crystals and the refinement of the melittin model have been reported elsewhere.[1,2] Here we discuss the determination and refinement of the form I structure which was based, in part, on our model of the form II crystals.

Crystals

The preparation and characterization of melittin form I crystals was described by Anderson et al. (1980).

Data Collection from Form I Crystals

Because the crystals grow in space group $P6_122$ as hexagonal prisms elongated along the *c*-axis, which is the long axis of the unit cell, the geometry is especially suitable for data collection by oscillation photography. A 2.5 Å resolution data set was recorded on eight two-film packs, each corresponding to a 4° rotation of the crystal about its *c*-axis. The crystal used to collect the data set was ~ 0.6 mm in length and 0.4 × 0.4 mm in cross section. The Lorentz/ polarization-corrected intensities from the eight packs were scaled using a two-dimensional scale-factor surface for each film.[3] ~ 3% of the observations from each film pack were rejected during scaling. The 6948 intensity measurements reduced to a unique data set of 1824 reflections, in which the *R* discrepancy factor (on F) for scaling is 5.8%. Table I summarizes some crystallographic parameters of the form I crystals.

TABLE I
CRYSTALLOGRAPHIC PARAMETERS FOR FORM I CRYSTALS OF MELITTIN

Quantity	Value
Space group	$P6_122$
Unit cell dimensions	
a = b	36.3 Å
c	126.9 Å
Number of melittin chains per asymmetric unit	2
Number of reflections in 2.5 Å native data	1,824
R_{scale} for native films (on F)	0.058
R-factor for fit of model to 10–2.5 Å x-ray data after 55 cycles of atomic refinement with the Hendrickson-Konnert procedure	0.28
Number of atoms included in atomic refinement	
Protein atoms	402
Solvent atoms	2
Crystallizing conditions	1.25 M $NaHCO_2$ and 1.05 M $(NH_4)_2SO_4$ in 0.02 M sodium phosphate, pH 7.2

FORM I STRUCTURE SOLUTION

As the form I crystals contained only half a melittin tetramer in the asymmetric unit, we suspected that these crystals might have a noncrystallographic two-fold axis of symmetry. A native Patterson map calculated to 4 Å resolution suggested that there is a noncrystallographic two-fold nearly parallel to the *c*-axis located at $X = \pm 0.085$ and $Y = \pm 0.17$, and thus that the melittin tetramer might be located at $X = \pm 0.085$, $Y = \pm 0.17$, $Z = 0.25$ in either of the space groups $P6_122$ or $P6_522$. A Crowther rotation function (Crowther, 1972) supported this interpretation and suggested that the noncrystallographic two-fold was tilted ~ 7° from the *c*-axis.

We then used the method of molecular replacement to determine the structure of melittin in the form I crystals, beginning with the known structure of the tetramer in the form II crystals.[1,2]

Assuming that the tetramer is centered near $X = \pm 0.085$, $Y = \pm 0.17$, $Z = 0.25$, the two-fold axis which is along the *a*-axis in the form II crystals must be along the crystallographic two-fold $(X, 2X, 1/4)$ in order that the molecules fit in the unit cell. An *R*-factor survey was carried out for both space groups $P6_122$ and $P6_522$, placing the form II tetramer in this position but testing all angles θ of the two noncrystallographic two-folds with respect to the *c* axis and all translations (Υ) along the crystallographic two-fold. In the resolution range 10–6 Å there were no values of θ and Υ that yielded an *R*-factor < 0.55 in either space group. For space group $P6_522$ there was also none in the resolution ranges 6–4 Å, 4–3 Å, or 3–2.5 Å. In space group $P6_122$ there was only one combination of Υ and θ in each of these three resolution ranges which yielded and *R*-factor of 0.55 or below. These values of Υ and θ all coincided and suggested that the melittin tetramer was located at $X = -0.08$, $Y = -0.16$, $Z = 0.25$ with a noncrystallographic two-fold tilted ~ 7° from the *c*-axis. (This orientation of the tetramers relative to the *c*-axis is nearly identical to that in the form II crystals.) The overall *R*-factor for the 10–2.5 Å data using this model was 0.48.

This model was refined using the method of Konnert and Hendrickson (Konnert, 1976) to an *R*-factor of 0.29 using all data with $F/\sigma_F > 1$ from 10–2.5 Å. Restrained individual isotropic "thermal factors" were included in this model and the RMS deviation of bond lengths from ideality was 0.03 Å.

At this point, a $(F_{obs} - F_{calc})\exp i\,\phi_{calc}$ difference map was calculated which yielded two large peaks related by the noncrystallographic two-fold. These peaks were located near the amino termini of each melittin chain, exactly the position of solvent molecules bound in the form II crystals. These solvent molecules were included in the refinement; after five additional cycles of refinement, the *R*-factor is 0.28. During the refinement, atoms in the model moved an RMS distance of only 0.7 Å, and no general features of the model were altered.

STRUCTURE OF THE FORM I CRYSTALS

The three-dimensional structures of the melittin polypeptide chain and of the melittin tetramer, as well as the locations of two strongly bound solvent atoms, are nearly identical in the form I and form II crystals. Even the packing of melittin tetramers against one another is closely similar in the two crystals. Because the structure of melittin in form II crystals has been described elsewhere in detail, here we report only briefly on the tertiary and quaternary structures of the melittin molecule in the form I crystals.

A single melittin polypeptide chain has the conformation of a bent α-helical rod (Fig. 1). Residues 1–10 form a straight α-helix as do residues 13–26, but the axes of the two helices form an obtuse angle with each other of ~ 120°. Fig. 1 shows the monomer from a direction

[3]Weissman, L., C. Stauffacher, and D. Eisenberg. 1981. Errors in film data collection: Fourier-Bessel scaling. In preparation.

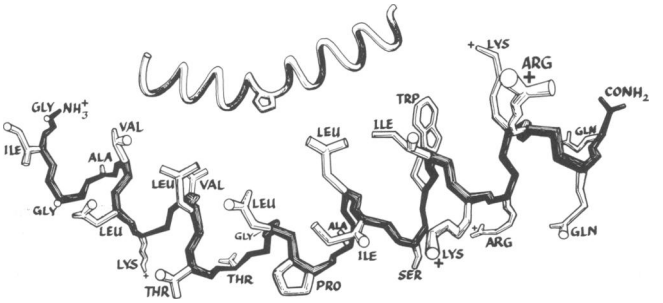

FIGURE 1 The conformation of the melittin monomer, as determined from form I and form II crystals. The inset depicts the helical path of the backbone, with an angle of ~ 120° between the two α-helical segments (residues 1–10 and 13–26). The main drawing is an accurate rendering of the path of the backbone and of the positions of the sidechains, with the possible exceptions of the lysine and arginine sidechains whose positions are not well defined in our electron density maps. Notice that the nonpolar sidechains extend mainly towards the inside of the bend, or upwards, and that the hydrophilic sidechains extend mainly toward the outside of the bend, or downwards. Essentially the same conformation is exhibited by the second melittin monomer of the asymmetric unit. Drawing by Mallory Pearce.

approximately perpendicular to the plane of the two helices. The single peptide group with conformational parameters that are non-α-helical is that between residues 11 and 12: it is turned ~ 180° from the orientation that it would have in an α-helix. This prevents four groups with hydrogen bonding potential from hydrogen bonding to protein atoms. Nevertheless, the path of the backbone follows an approximately helical path through the bend region, as it does through the entire polypeptide chain. In fact, residues Leu 9 and Leu 13, though in different helical segments, have about the same orientations in space as they would if they were in the same α-helix. In other words, though bent, the melittin monomer forms a virtual helix.

The melittin helix exhibits a distinctive orientational segregation of hydrophilic and hydrophobic side chains. The hydrophobic side chains are oriented mainly towards the "inside" of the bend of the helix, and the charged and polar side chains are oriented mainly towards the "outside" of the bend (Fig. 1). Residues 1–6 are all nonpolar and the helix is nonpolar around its entire circumference, but the bulky sidechains of residues Ile 2, Val 5, and Leu 6 are all oriented toward the inside. For residues 7–20 the monomer displays virtually complete orientational segregation with all of the polar and charged side chains extending outwards. For residues 21 through 26, the helix has charged and polar side chains around its entire circumference, but the side chains are sufficiently long that the three side chains that extend towards the inside (Lys 23, Arg 24, and Gln 26) might in other environments be bent towards the outside.

The four polypeptide chains in the melittin tetramer are related as shown schematically in Fig. 2. Chains *A* and *B* form one asymmetric unit of protein within the crystal, and these are related to chains *C* and *D* by a two-fold axis of symmetry. There is a noncrystallographic two-fold axis that relates chain *A* to *B* and *C* to *D*, so that the melittin tetramer has pseudo-222 symmetry. Notice that this symmetry places the highly charged *C*-terminal regions relatively far from one another, minimizing the repulsions among the 24 positive charges of the molecule, and producing a "coat" of charged residues that provide ion-dipole interactions between melittin and the aqueous solvent. These forces presumably account for the high aqueous solubility of this relatively hydrophobic peptide. Of course, repulsions between the positively charged tetramers also contribute to the solubility of tetrameric melittin.

Though not shown in Fig. 2, the hydrophobic side chains from the four monomers face inward in the tetramer, interdigitating and forming a "hydrophobic bond." The geometry of this region is described by Terwilliger and Eisenberg.[1,2]

The melittin tetramers pack in the crystal in what might be called a double planar layer. The upper layer consists of dimers of melittin (such as *AB* dimer of Fig. 2) with their hydrophobic side chains extending downward, and the lower layer consists of dimers with their hydrophobic sidechains extending upwards. A plane can be imagined that bisects the two layers; this plane would touch almost entirely hydrophobic side chains. Parallel planes above and below would touch almost entirely hydrophilic side chains (the outsides of the tetramers). Within a layer, the two chains of one dimer form very tight contacts with two chains of a dimer in a neighboring tetramer. These end-to-end dimers form long melittin "strings" that run in each half of the double layer. The tightness of these end-to-end contacts is shown in Fig. 3,

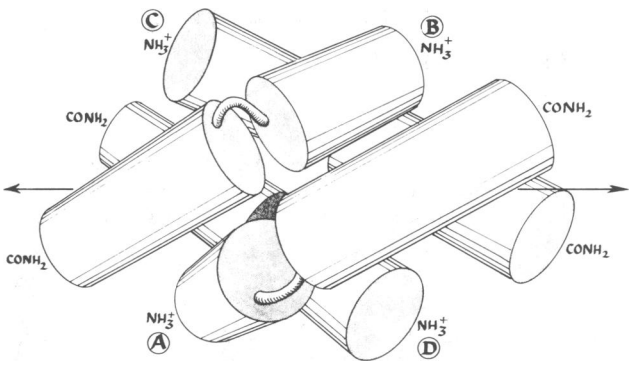

FIGURE 2 A schematic representation of the positions of the four melittin polypeptides in a tetramer in the form I and form II crystals. Each segment of helix is represented by a cylinder, and the polypeptide backbone in the region of residues 11 and 12 is represented as a wire. Polypeptide chains *A* and *B* are related to chains *C* and *D* by a crystallographic two-fold axis, shown as a two-headed arrow. A noncrystallographic two-fold axis relates chain *A* to chain *B* and chain *C* to chain *D*. By comparison with Fig. 1, it can be appreciated that the nonpolar sidechains of all four chains extend towards the center of the tetramer, where they interdigitate. This geometry is described in detail by Terwilliger and Eisenberg.[1,2] Drawing by Mallory Pearce.

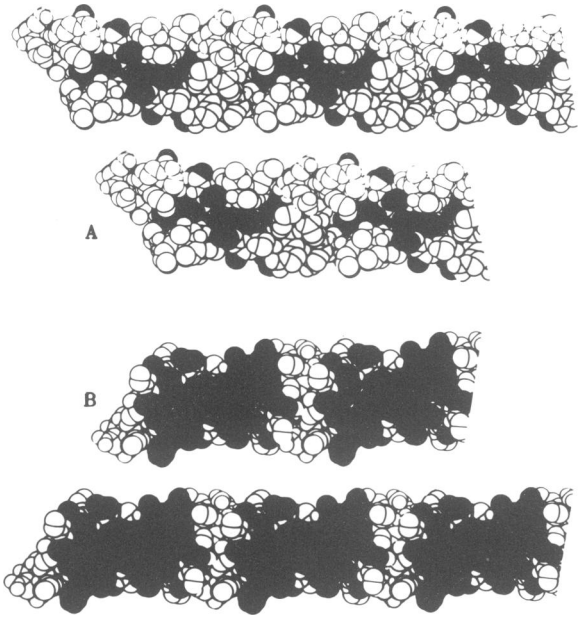

FIGURE 3 Hydrophilic and hydrophobic faces of a layer of melittin chains in the form I crystals. A space-filling model of two "strings" of melittin dimers, with the side chain atoms of hydrophobic amino acids shaded, is shown in views from the plus and minus *c*-directions. A total of five dimers is shown in each view. *A*, Hydrophilic faces (the outsides of the tetramers). *B*, Hydrophobic faces (insides of the tetramers).

which displays one-half of a double layer from above and below. In contrast, the contacts between one string of dimers and the strings that run parallel to it in the same layer are not very close (Fig. 3). The strings of dimers are held in place through hydrophobic interactions across to the other half of the double layer, where the dimers form melittin strings that run at an angle of ~ 120° with the first set of strings.[1,2]

The packing of one double layer on top of the next double layer is what distinguishes the form I crystals from the form II crystals. In the form I crystals each layer is rotated by 60° about the *c*-axis (perpendicular to the layer) from the layer below it. In the form II crystals, each layer is rotated 180° about the *c*-axis relative to the layer below it.

DISCUSSION

Surface Activity

The surface properties of melittin, such as its affinity for air-water interfaces, may be related to the double layered structure found in both the form I and the form II crystals. As described above, the melittin tetramers are arranged in planes composed of two layers of dimers sandwiched together face-to-face. A single such layer of dimers (Fig. 3) has one extremely hydrophobic face (composed of the insides of the half tetramers) and one hydrophilic face (composed of the outsides of the same set of half tetramers). We suggest that such a half-layer of melittin chains may correspond to a surface monolayer of melittin.

Observations on crystal growth offer two types of support for this speculative suggestion. The first is that form I crystals grow directly from the surface of melittin-containing droplets with planar double layers of tetramers parallel to the surface of the droplet. It is our hypothesis that the face in contact with air is the hydrophobic surface. The second type of support is simply the similarity in the structures of the double layers within the form I and form II crystals. This lead us to suppose that the end-to-end contacts between melittin dimers might have a significant binding energy in aqueous solutions, and that they might determine the contacts between melittin molecules in a surface monolayer. Extensive oligomerization of melittin at the air-water surface has been deemed unlikely by DeGrado et al. (1981), however, on the basis of surface pressure-area curves.

The surface monolayers of melittin would not be expected to be exactly like the plane of melittin chains shown in Fig. 3, however, for as noted above, the strings of melittin dimers are close-packed only in the end-to-end direction. The chains in a monolayer would presumably be close-packed in the side-to-side directions as well.

This hypothesis suggests a number of predictions. One is that the structure of melittin monomers in the surface monolayer is similar to that in the crystal structures — essentially α-helical. Also, the molecular directions would be highly anisotropic, with the axes of all dimers running roughly parallel. Finally, the surface area per melittin chain of a melittin monolayer would be roughly equal to that occupied by a chain in the crystals less the area between the strings of dimers (30% of the total area). This is 400 $Å^2$ per chain, in good agreement with the value of 368 $Å^2$ obtained by DeGrado et al. (1981).

Interaction with Lipid Bilayers

Several lines of evidence suggest that melittin in micelles and lipid bilayers is present as a unit smaller than a tetramer. The hydrodynamic studies of Lauterwein et al. (1979) are among the most direct: these investigators showed that melittin forms mixed micelles with lysolecithin containing one melittin chain per micelle. Similarly, Knöppel et al. (1979), using cross-linking studies, concluded that melittin was probably monomeric in the presence of the detergents Brij 58 and deoxycholate. Our model for tetrameric melittin is consistent with these results because the hydrophilic exterior of the tetramer would prevent contact between the hydrophobic interior of melittin and the apolar regions of micelles and membranes. In contrast, a monomer of melittin in the conformation we observe, or a dimer, or a string of dimers would all have exposed hydrophobic regions and thus could conceivably interact with the apolar region of membranes.

Given that melittin does not interact with membranes as a tetramer, we must ask whether the backbone conformation of melittin in membranes and micelles is similar to that of tetrameric melittin of the form I and II crystals. Experiments on the circular dichroism and NMR of melittin presented by Lauterwein et al. (1979) and by Braun et al. (1980) indicate that the backbone conformations are similar for tetrameric melittin, melittin in detergent, and melittin in membranes.

Given that the backbone conformations of melittin in lipid bilayers has some similarity to the bent rod conformation of our crystals, we may ask if the bent rod lies in the plane of the bilayer or perpendicular to it. Our structure is most compatible with the bent rod in the plane of the bilayer. This is because of the orientational segregation of side chains described above, in which the hydrophilic side chains are directed mainly toward the outside of the bent rod and the hydrophobic side chains are directed predominantly toward the inside. Fig. 4 is a schematic drawing of a melittin monomer inserted into a phosphatidylcholine bilayer, with the hydrophobic inner surface located in the apolar portion of the membrane. In this figure, the side chains of Lys 23 and Gln 26 have been bent so that they do not extend into the lipid; otherwise the structure is identical to that found in the crystalline tetramer. It can be seen from Fig. 4 that nearly all of the hydrophobic side chains can be located in the apolar region of the membrane, while the polar and charged residues are nearly all in the solvent and/or polar headgroup region. We assume that the amino terminus is uncharged when in the bilayer. This drawing could also serve as a model for melittin integrated into a surface monolayer of lipid, and a similar interaction might be envisioned for melittin in a detergent micelle.

Others have considered the possibility that melittin might insert into lipid bilayers as a helix, or partial helix, with the helix axis or axes more parallel than perpendicular to the bilayer. Dawson et al. (1978) proposed a model for melittin-lipid interactions with many of the same features as the above, except that their model for the melittin molecule is unlike the conformation in the form I and II crystals with respect to the placement and the extent of the bend and the regions of the α-helix. Segrest et al. (1974) proposed that amphiphilic α-helices might determine the lipid binding characteristics of apolipoproteins and DeGrado et al. (1981) designed and synthesized a cytotoxic, amphiphilic α-helix with melittin-like activity.

The structure of the melittin monomer in our crystals is also consistent with a model in which a monomer runs roughly perpendicular to a bilayer, in the sense that the amino groups of Lys 7 and Lys 21 can be separated by 30 Å without changing the backbone structure of the monomer, a distance roughly sufficient to span the hydrophobic portion of a membrane. This would place residues Thr 10, Thr 11, and Ser 18 in the hydrophobic portion of the membrane, and would demand that the amino terminus,

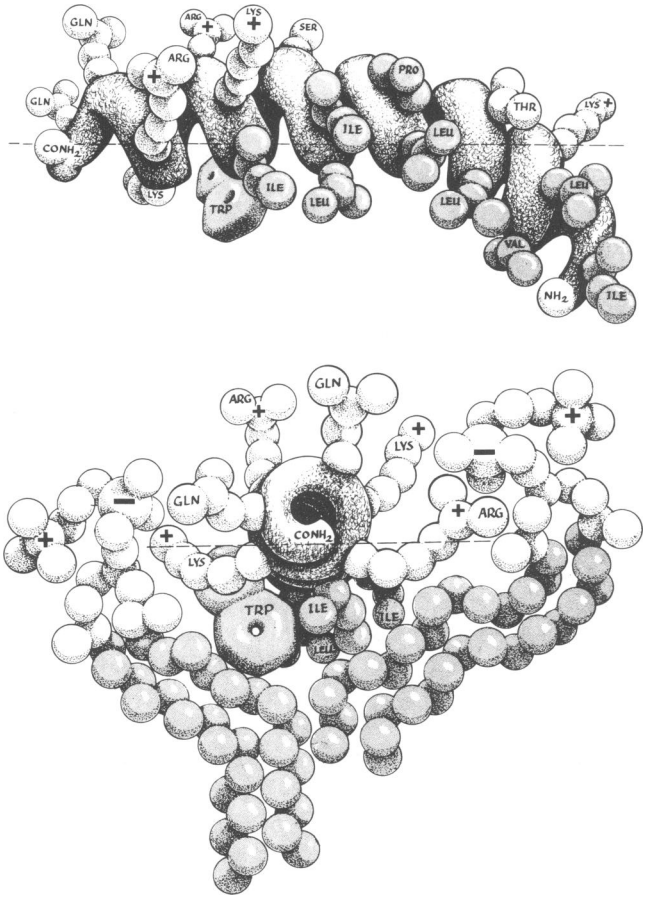

FIGURE 4 A schematic drawing of a melittin monomer in a bilayer. One melittin chain is in the conformation it might assume in a phosphatidylcholine bilayer. The melittin chain is oriented so that hydrophilic side chains extend upwards towards the aqueous phase and hydrophobic side chains extend downwards. Hypothetical interactions between positively charged side chains and phosphate groups are depicted in one view. The side chains of Lys 23 and Gln 26 have been bent so that they do not extend into the lipid; otherwise the structure is identical to that found in the crystalline tetramer. The two views shown are perpendicular to each other and the line indicates the approximate boundary between polar and apolar regions. Notice that the melittin chain occupies space only near the headgroups of the phospholipid molecules, producing a folding around melittin of the fatty acid chains. Drawing by Mallory Pearce.

containing Lys 7, be transported across the intact bilayer. This seems unlikely to us partly on the basis of the experiments of Habermann and Kowallek (1970). They showed that 83% conversion of the three lysine residues in melittin to homoarginine increases the hemolytic activity of melittin. Thus, given that homarginine has a pK of 12 compared to the pK of ~ 10 for lysine, it appears that deprotonation of lysine 7 is not required for lysis. As the rate of transport of charged species across lipid bilayers is slow, this suggests that the amino terminus of melittin does not cross the bilayer before lysis, and hence, that perpendicular insertion is less likely than parallel insertion.

Additional support for our hypothesis that melittin integrates into the surface of lipid bilayers with the helical axis parallel to the bilayer comes from consideration of the

interaction of melittin with surface lipid monolayers. Although as discussed above, the interactions of melittin with lipid bilayers, air-water interfaces, and surface lipid monolayers are not identical, they may be analogous because in each case melittin interacts with a polar-apolar interface. We suggest that the differences between these interactions may consist of different melittin-melittin interactions. In the cases of the interaction of melittin with surface lipid monolayers or air-water interfaces, the apolar region (air) is far thicker than the ~30 Å thickness of the apolar region of a membrane. Consequently, melittin cannot "span" this apolar region, and either Lys 7 is in the apolar region, which seems unlikely, or melittin lies parallel to the surface of the interface, as proposed above.

A Model for the Lytic Activity of Melittin

Using a variety of means, others have demonstrated that the insertion of melittin into lipid bilayers causes changes in the bilayer structure which, at sufficiently high concentration of melittin (~ 10% melittin in a membrane by weight) leads to bilayer rupture (Sessa et al., 1969; Williams and Bell, 1972; Hegner et al., 1973; Verma and Wallach, 1976; Dawson et al:, 1978; Knöppel et al., 1979). The breakdown of the membrane structure is manifested in several ways. When melittin is added to liposomes, permeability to small ions and nonelectrolytes increases (Sessa et al., 1969). The size of membrane lesions appears to depend on the concentration of melittin. When fibroblasts were treated with melittin, small molecules leaked from the cells more quickly than large ones at low melittin concentrations. At higher concentrations of melittin, the rates of leakage were similar for molecules of various sizes (Thelestam and Möllby, 1976). When erythrocyte ghosts were treated with melittin and examined by electron microscopy, sheets and regular net-like structures were observed (Sessa et al., 1969). The events leading to lysis are not known, but Dawson et al. (1978) have proposed that melittin causes a "wedge" effect in which melittin occupies space near the headgroup region of the phospholipid molecules in the bilayer, but does not extend all the way to the center of the bilayer. In order that there not be any empty space "underneath" the melittin molecule, the membrane must be distorted from a smooth planar bilayer in this region (Fig. 4); presumably this would be an unfavorable configuration for the membrane.

If melittin acts primarily through a wedge effect, then it is much like a detergent. The tendencies of amphipathic molecules such as detergents or phospholipids to form bilayers is governed at least partly by the relative cross-sectional areas of the polar and hydrophobic regions of the molecule (Israelachvili and Mitchell, 1975). Phosphatidylcholine, for example, has roughly equal areas for the two; it forms stable bilayers because both head and tail regions can be essentially close-packed in a planar bilayer. Lysophosphatidylcholine, however, has only one-half the area in the hydrophobic region that it does in the headgroup region: it forms micelles and breaks down bilayers (Helenius and Simons, 1975). Compared to a phosphatidylcholine molecule, melittin has a large "headgroup" (the charged C-terminus and the polar side of residues 7–21) and a smaller and very short hydrophobic region (residues 1–6 and the apolar side of residues 7–21). A molecule with this shape is unlikely to be stable in a planar phosphatidylcholine bilayer. However, melittin might, by analogy with the detergents, be stable in mixed micelles with bilayer lipids. Similarly, melittin might be stable at the "edge" of a planar bilayer, or equivalently on the perimeter of a lipid pore in a bilayer. These last properties, if correct, would explain some of the morphological effects of melittin on multilamellar liposomes. Upon incubation with melittin, these liposomes (which have no "edges") disintegrate partially into flat sheets of lipid — presumably bilayers — which do have edges where melittin might be stable (Sessa et al., 1969). Similarly, upon treatment of murine leukemia virus capsids with melittin, the viral membrane "peels off" the surface, generating membrane "edges" which could be stabilized by melittin (Esser et al., 1979).

Since melittin is initially accessible to one side of a membrane only, there may be an additional force which contributes to membrane disruption (Sheetz and Singer, 1974). As long as the melittin enters only into one-half of the bilayer, the surface area of this half would increase relative to that of the other side. The resulting increase in membrane curvature might be part of the driving force for formation of lipid pores or for rupturing the membrane.

On the basis of these considerations, we suggest the following speculative model for the lytic action of melittin. At low concentrations in a membrane, melittin lies parallel to the membrane surface as in Fig. 4: the membrane is weakened by the wedge effect, but is intact. As the melittin concentration increases, the surface area of that side of the membrane increases, leading to the spontaneous formation of lipid pores, stabilized by melittin, which allow the lipids to redistribute towards the other side of the bilayer. As the melittin concentration increases further, the size of these pores increases until they connect and the membrane disintegrates into flat sheets. Finally, at extremely high melittin concentrations, the sheets might be broken down into smaller mixed micelles of melittin and lipid.

Essentially all of these processes could occur in membrane-detergent systems as well; many of these ideas have, in fact, been presented earlier for such systems (Helenius and Simons, 1975). Additionally, some other lytic proteins might act in this fashion. One possibility is δ-haemolysin, a peptide with an amino acid sequence that suggests that it, like melittin, has the capacity to form an amphipathic helix (Fitton et al., 1980).

CONCLUSION

On the basis of the model presented above, the chief difference between melittin and proper membrane proteins

is that melittin penetrates only partway into one leaflet of the lipid bilayers; any protein of uniform cross-section that penetrates all the way across a bilayer or exactly half-way across a bilayer would not be expected to destabilize the bilayer structure in the same manner as melittin. In this model, it is the amphipathic character of the melittin helix, with one hydrophilic face and one hydrophobic face, that causes it to make a partial penetration. This amphipathic character of melittin determines its tendency to lie at the surface of polar and apolar phases, and thus also contributes to the surface activity of melittin. Given this behavior of melittin, it might be termed a surface-active protein to distinguish it from globular and stable membrane-bound proteins.

We thank Dr. E. G. Goldsmith for calculation of the Crowther fast rotation function on the form I data, Mr. F. Tsui for help in data reduction, and Mr. M. Pearce for drawings.

We are grateful for the support of grant PCM 80-03725 from the National Science Foundation and grant GM 16925 from the National Institutes of Health. T. C. Terwilliger is a predoctoral fellow of the National Science Foundation.

Received for publication 20 April 1981.

REFERENCES

Anderson, D., T. C. Terwilliger, W. Wickner, and D. Eisenberg. 1980. Melittin forms crystals which are suitable for high resolution x-ray structural analysis and which reveal a molecular 2-fold axis of symmetry. *J. Biol. Chem.* 255:2578–2582.

Brown, L. R., J. Lauterwein, and K. Wüthrich. 1980. High-resolution ^{1}H-NMR studies of self-aggregation of melittin in aqueous solution. *Biochim. Biophys. Acta.* 622:231–244.

Crowther, R. A. 1972. The fast rotation function. *In* Molecular Replacement Method. M. G. Rossman, editor. Gordon and Breach. New York. 173–178.

Dawson, C. R., A. F. Drake, J. Helliwell, and R. C. Hider. 1978. The interaction of bee melittin with lipid bilayer membranes. *Biochim. Biophys. Acta.* 510:75–86.

DeGrado, W. F., F. J. Kézdy, and E. T. Kaiser. 1981. Design, synthesis and characterization of a cytotoxic peptide with melittin-like activity. *J. Am. Chem. Soc.* 103:679–681.

Eisenberg, D., T. C. Terwilliger, and F. Tsui. 1980. Structural studies of bee melittin. *Biophys. J.* 32:252–254.

Esser, A. F., R. M. Bartholomew, F. C. Jensen, and H. J. Müller-Eberhard. 1979. Disassembly of viral membranes by complement independent of channel formation. *Proc. Natl. Acad. Sci. U.S.A.* 76:5843–5847.

Fitton, J. E., A. Dell, and W. V. Shaw. 1980. The amino acid sequence of the delta haemolysin of *S. Aureus. Fed. Eur. Biochem. Soc. Lett.* 115:209–212.

Habermann, E. 1972. Bee and wasp venoms. *Science (Wash., D.C.).* 177:314–322.

Habermann, E., and J. Jentsch. 1967. Sequenzanalyse des Melittins aus den tryptischen und peptischen Spaltstücken. *Hoppe-Seyler's Z. Physiol. Chem.* 348:37–50.

Habermann, E., and H. Kowallek. 1970. Modifikationen der Aminogruppen und des Tryptophans im Melittin als Mittel zur Erkennung von Structur-Wirkungs-Beziehungen. *Hoppe-Seyler's Z. Physiol. Chem.* 351:884–890.

Hegner, D., U. Schummer, and G. H. Schnepel. 1973. The interaction of a lytic peptide, melittin, with spin-labelled membranes. *Biochim. Biophys. Acta.* 291:15–22.

Helenius, A., and K. Simons. 1975. Solubilization of membranes by detergents. *Biochim. Biophys. Acta.* 415:29–79.

Israelachvili, J. N., and D. J. Mitchell. 1975. A model for the packing of lipids in bilayer membranes. *Biochim. Biophys. Acta.* 389:13–19.

Knöppel, E., D. Eisenberg, and W. Wickner. 1979. Interactions of melittin, a preprotein model, with detergents. *Biochemistry.* 18:4177–4181.

Konnert, J. H. 1976. A restrained parameter least squares refinement procedure for large asymmetric units. *Acta Cryst.* A32:614–617.

Lauterwein, J., C. Bösch, L. R. Brown, and K. Wüthrich. 1979. Physiochemical studies of the protein-lipid interactions in melittin-containing micelles. *Biochim. Biophys. Acta.* 556:244–264.

Mollay, C. 1976. Effect of melittin and melittin fragments on the thermotropic phase transition of dipalmitoyllecithin and on the amount of lipid-bound water. *Fed. Eur. Biochem. Soc. Lett.* 64:65–68.

Mollay, C., G. Kriel, and H. Berger. 1976. Action of phospholipases on the cytoplasmic membrane of *Escherichia coli. Biochim. Biophys. Acta.* 426:317–324.

Segrest, J. P., R. L. Jackson, J. D. Morrisett, and A. M. Gotto, Jr. 1974. A molecular theory of lipid-protein interactions in the plasma lipoproteins. *Fed. Eur. Biochem. Soc. Lett.* 38:247–253.

Sessa, G., J. H. Freer, G. Colacicco, and G. Weissmann. 1969. Interaction of a lytic polypeptide, melittin, with lipid membrane systems. *J. Biol. Chem.* 244:3575–3582.

Sheetz, M. P., and S. J. Singer. 1974. Biological membranes as bilayer couples. A molecular mechanism of drug-erythrocyte interactions. *Proc. Natl. Acad. Sci. U.S.A.* 71:4457–4461.

Talbot, J. C., J. DuFourcq, J. deBony, J. F. Faucon, and C. Lussan. 1979. Conformational change and self association of monomeric melittin. *Fed. Eur. Biochem. Soc. Lett.* 102:191–193.

Thelestam, M., and K. Möllby. 1976. Cytotoxic effects on the plasma membrane of human diploid fibroblasts. A comparative study of leakage tests. *Medical Biology.* 54:39–49.

Verma, S. P., and D. F. H. Wallach. 1976. Effect of melittin on the thermotropic lipid state transitions in phosphatidylcholine liposomes. *Biochim. Biophys. Acta.* 426:616–623.

Williams, J. C., and R. M. Bell. 1972. Membrane matrix disruption by melittin. *Biochim. Biophys. Acta.* 288:255–262.

DISCUSSION

Session Chairman: Donald M. Engelman *Scribe*: Robert W. Williams

GEORGHIOU: You indicated in your paper that your melittin-phospholipid model is compatible with a protein monomer or a dimer but not with a tetramer. Our optical data (Georghiou et al., this volume) suggest that melittin binds to the phospholipid in an aggregated form, but does not allow determination of the number of protein molecules participating in the aggregate. Also, our fluorescence quenching data suggest that the tryptophan residue does not penetrate deeply into the bilayer. The positioning of that residue in your model is compatible with those data. Would you comment?

TERWILLIGER: Yes, that is completely compatible with our model. In fact, in the tetramer the tryptophan is exposed to the solvent and to the ϵ-amino group of Lys 23 but is mainly surrounded by hydrophobic side chains.