Drug delivery characteristics of metered-dose inhalers

Robert K. Schultz, PhD *St. Paul, Minn.*

The first metered-dose inhaler (MDI) was developed in 1956 by Riker Laboratories, which has since been incorporated into 3M Pharmaceuticals. During the past 37 years, little has changed regarding the basic design of the MDI. What has increased substantially, however, is our knowledge about the operating characteristics of the system. This section will focus on the mechanism of operation of the MDI and characterization of some of the drug delivery parameters that may be important to patient therapy.

MECHANISM OF OPERATION

The MDI is a complex dosage form in that the container/closure system is integral to the delivery of the drug to the patient. The MDI consists of a solution or suspension of the drug dispersed in the propellant, a valve and container, and an actuator (Figs. 1 and 2). All parts of the system are required to work in concert so that a reproducible respirable dose is delivered to the patient.

It was the invention of the metered-dose valve that allowed the development of the first MDIs. Although several metered-dose valve designs are available, the basic mechanism of action remains the same. At rest, the metering chamber of the valve is in communication with the bulk formulation. On actuation, just before the side stem hole entering the metering chamber, the volume contained in the metering chamber is sealed off from the rest of the formulation. Thus the metered volume is determined by the volume of the valve-metering chamber. The difference between the pressure of the propellant and the ambient pressure, approximately 50 pounds per square inch, allows the liquid propellant to boil explosively, causing the formulation to be expelled through the valve stem. Finally, as the stem is allowed to return to the rest position, the formulation refills the metering chamber. The filling of the metering chamber after actuation is largely due to the pressure differential between the bulk formulation and the empty metering chamber. It is important to realize that the next dose to be delivered to the patient, whenever that may be, is filled into the metering chamber immediately after the current dose has been taken. This has implications for how patients use an MDI.

Abbreviation used
MDI: Metered-dose inhaler

FACTORS AFFECTING DOSE UNIFORMITY OF MDIs

Loss of prime

With the current valve designs, loss of prime can affect all MDI products, including solution and suspension formulations. Loss of prime occurs when the MDI is not actuated for a significant period of time and the propellant has, through a variety of mechanisms, evaporated or drained from the metering chamber. On the first actuation(s) after a rest period, the patient will then receive a reduced amount or no formulation. Once the metering chamber is refilled with the formulation, the MDI operates as expected. This phenomenon typically takes days to weeks to occur and therefore is not usually a concern for patients who use their MDI on a regular basis.

Loss of dose

Cyr et al.[1] of the Canadian Health Protection Branch has demonstrated the effect of vial storage position on the drug content contained in single actuations. This study indicated that for an MDI formulation that tended to cream, the drug content of the first actuation after a short rest period, in the valve-down orientation, was substantially less than that of subsequent actuations. This effect of orientation on the drug content of the first actuation after a short rest period has been referred to as "loss of dose." However, studies in our laboratory

From the Inhalation Technology Laboratory, 3M Pharmaceuticals.
J ALLERGY CLIN IMMUNOL 1995;96:284-7.
Copyright © 1995 by Mosby–Year Book, Inc.
0091-6749/95 $3.00 + 0 **1/0/64640**

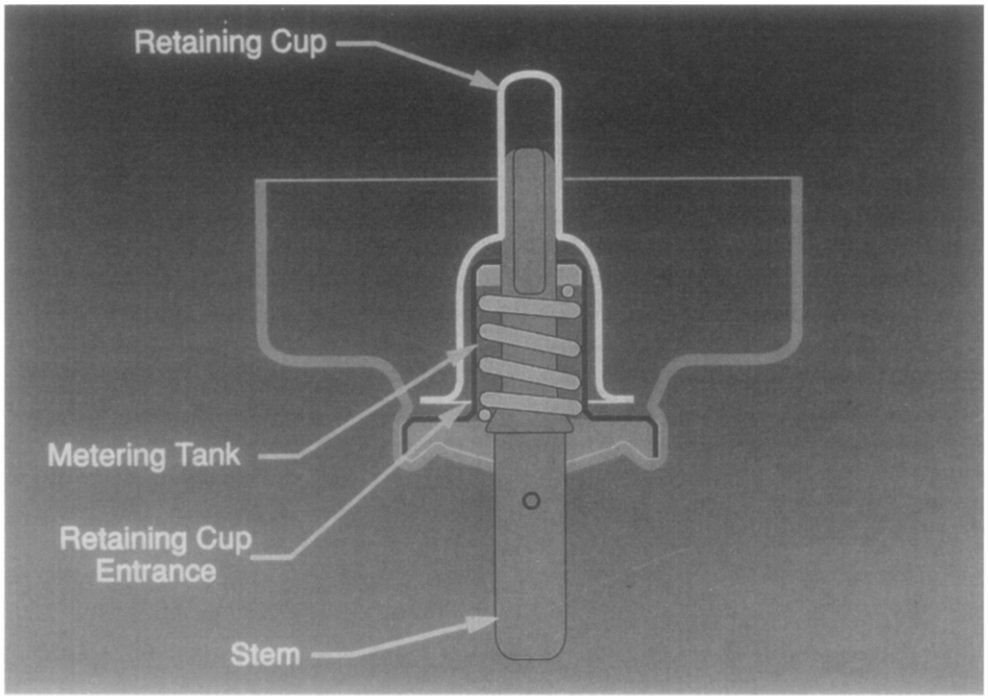

FIG. 1. Example of MDI with valve "A" design (valve-down orientation). In valve "A" design, fill holes that allow formulation to enter valve are located at base of retaining cup. Valve A is manufactured by 3M Pharmaceuticals.

have indicated that the effect of orientation on the drug content of the first actuation results from an interaction between the valve and formulation, and therefore some products do not demonstrate a significant "loss of dose" behavior. In the case of "loss of dose," the drug content of the first spray may be substantially different (higher or lower) compared with subsequent sprays; however, the total amount of propellant delivered to the patient is not significantly different. Thus unlike loss of prime, patients may be unaware they received less drug in the first spray, because the drug content of each spray is only a very small percentage of the total formulation delivered.

Tail-off

Tail-off is defined as the degradation in the accuracy of the delivery from an MDI as it begins to run out of formulation. Although both loss of prime and loss of dose can occur anytime in the life of an inhaler, the phenomenon referred to as "tail-off" begins to affect dose reproducibility only as an inhaler begins to run out of formulation. Tail-off occurs after the labeled number of doses has been delivered from the MDI. Subsequently, tail-off will only be a factor if a patient happens to use the product to exhaustion. Tail-off is a function of the valve design and relates to the position at which the formulation enters the valve. As such, MDI products have unique tail-off characteristics associated with a particular valve.

With current valve designs, it is not possible to have the canister run out of formulation at an exact point, leaving it completely empty. However, depending on the valve design, the tail-off may be rapid; that is, within three to five actuations, or erratic, requiring 10 to 20 actuations before the canister is finally empty. MDIs produced with valves with fill holes at the base of the retaining cup have a more rapid or less erratic tail-off than those made with valves with fill holes at higher levels (Figs. 3 and 4). Because the canister is inverted during use, the position of the fill hole into the valve is critical. During use, the level of the liquid in the canister falls. Once the level of formulation approaches the height of the fill hole, delivery can become erratic. This is a result of incomplete filling of the valve because of (1) fluctuation in formulation height depending on orientation and (2) the specific valve design (position of the entry hole can vary between suppliers). Therefore, the tail-off phenomenon occurs whenever the height of the liquid falls below the fill hole into the valve at the time of actuation. For valve designs having the fill

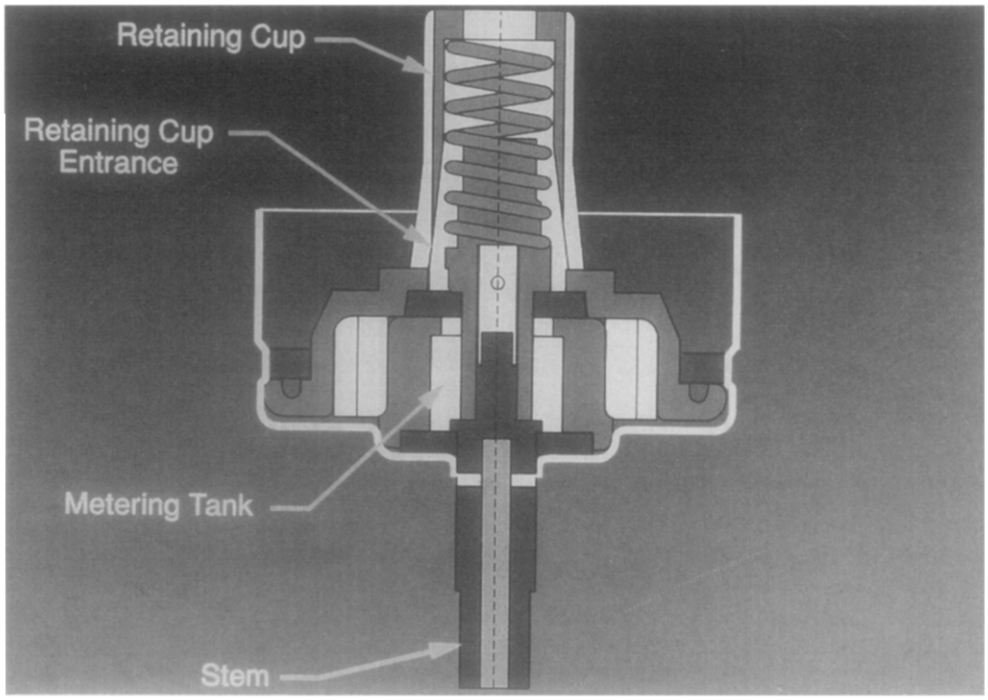

FIG. 2. In MDI design valve "B," fill holes are located at higher levels in relation to base of retaining cup (valve-down orientation).

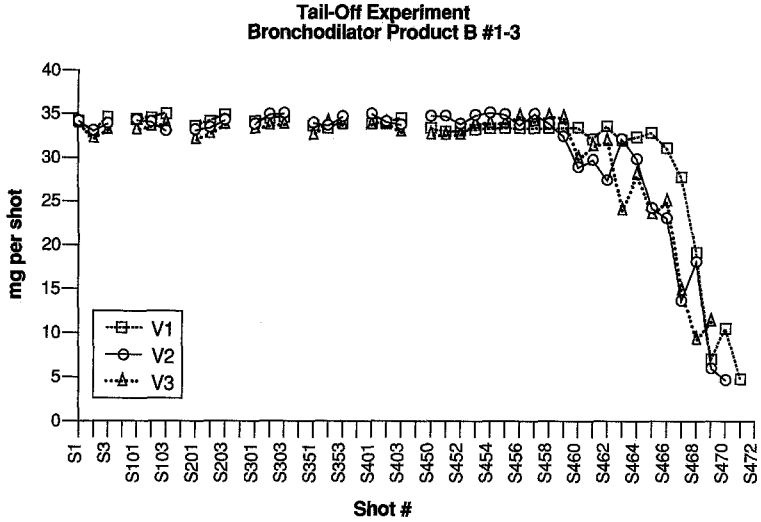

FIG. 3. Position of fill hole into valve is critical. Experiment using bronchodilator product B #1-3 in three separate MDIs with valve "A" design (V1, V2, and V3) demonstrates rapid tail-off as canister is emptied.

hole near the base, the uniformity of delivery is less sensitive to MDI orientation or amount remaining in the canister. In this instance the height of the formulation is always above the fill hole until the canister is nearly depleted. For valves with fill holes positioned at higher levels, incomplete and erratic filling can begin to occur with as much as 1.0 to 1.5 gm of formulation remaining (approximately 10 to 20 doses). If the product tail-off profile is erratic, then shot weights of 10% to 100% of target may be possible as the canister contents become depleted. The tail-off phenomenon may explain the recent reports regarding the apparent decreased efficacy of MDI products when used near the end of the container life.[2,3]

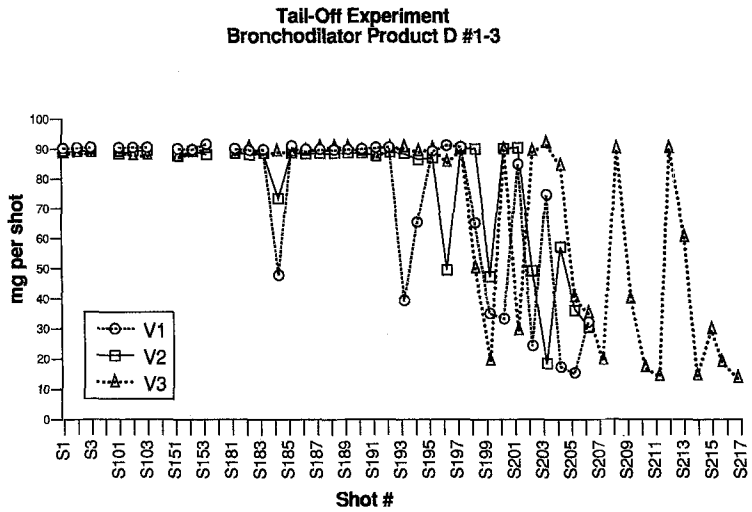

FIG. 4. Using bronchodilator product D #1-3 in three separate MDIs (V1, V2, and V3) with valve "B" design illustrates erratic tail-off characteristics as canister is emptied, a result of incomplete filling.

Use of spacers

Add-on devices such as "spacers" are used with MDI sprays when patients have poor coordination or when steroids are indicated to reduce oropharyngeal deposition of drug particles.[4] However, few studies are available that document the in vitro drug delivery characteristics of the MDI and spacer combination. Studies in our laboratory as well as in others[5] have found that the amount of respirable particles produced from an MDI can be significantly affected by the use of spacers. In many cases, depending on the administration technique, the use of an add-on spacer with an MDI can result in a substantial reduction in the amount of respirable particles available to the patient. The actual amount of particles of aerodynamic size less than 5 μm that exit an MDI-spacer combination has been shown to be a function of numerous factors, including MDI formulation, drug particle size, spacer type, and administration technique. Therefore the use of an add-on spacer could contribute to significant variability in drug delivery from the MDI, which may affect the clinical evaluation of drug therapy.

CONCLUSIONS

Drug delivery from an MDI results from a complex interaction between the formulation, valve, and actuator. Several factors contribute to the dose reproducibility of MDIs. Although these factors may be transient and not representative of the average behavior of MDI performance during routine use, such differences may still be of clinical importance. In addition, the use of add-on devices such as spacers to overcome some of the problems associated with the MDI delivery system may actually result in a degradation of dose reproducibility. Therefore the drug delivery characteristics of a specific MDI/spacer combination and the effect of administration technique are important issues to consider when these add-on devices are used.

REFERENCES

1. Cyr TD, Graham SJ, Li KYR, Lovering EG. Low first-spray drug content in albuterol metered-dose inhalers. Pharm Res 1991;8:658-60.
2. Bergner A, Greisner WA, Bergner RK. Metered-dose inhalers: the specified number of sprays [Letter]. JAMA 1993; 269:1506.
3. Baldwin JL, Meltzer EO. Should MDIs be used until they are completely empty? J Respir Dis 1993;14:1222-3.
4. Konig P. Spacer devices used with metered-dose inhalers: breakthrough or gimmick? Chest 1985;88:276-84.
5. Padfield JM. Principles of drug administration to the respiratory tract. In: Ganderton D, Jones T, eds. Drug delivery to the respiratory tract. Chichester, England: Ellis Horwood Ltd, 1987:75-86.